YASKAWA

YRC1000micro OPTIONS
INSTRUCTIONS

FOR ARM INTERFERENCE WITH SPECIFIED CUBIC AREA CHECK FUNCTION

Upon receipt of the product and prior to initial operation, read these instructions thoroughly, and retain for future reference.

MOTOMAN INSTRUCTIONS

MOTOMAN-□□□ INSTRUCTIONS
YRC1000micro INSTRUCTIONS
YRC1000micro OPERATOR'S MANUAL
YRC1000micro MAINTENANCE MANUAL
YRC1000micro ALARM CODES (MAJOR ALARMS) (MINOR ALARMS)

The YRC1000micro alarm codes above consists of "MAJOR ALARMS" and "MINOR ALARMS".

Please have the following information available when contacting Yaskawa Customer Support:
- System
- Primary Application
- Software Version *(Located on Programming Pendant by selecting: {Main Menu} - {System Info} - {Version})*
  Robot Serial Number *(Located on robot data plate)*
  Robot Sales Order Number *(Located on controller data plate)*

Part Number: 181280-1CD
Revision: 0

Yaskawa Customer Support
- 24-hour Telephone Number: **(937) 847-3200**
  Use for urgent or emergency needs for technical support, service and/or replacement parts
- Routine Technical Inquiries: *techsupport@motoman.com*
  Allow up to 36 hours for response

MANUAL NO.
HW1484510

DANGER

- This manual explains the arm interference with specified cubic area check function of the YRC1000micro system. Read this manual carefully and be sure to understand its contents before handling the YRC1000micro. Any matter not described in this manual must be regarded as “prohibited” or “improper”.
- General information related to safety are described in “Chapter 1. Safety” of the YRC1000micro INSTRUCTIONS. To ensure correct and safe operation, carefully read “Chapter 1. Safety” of the YRC1000micro INSTRUCTIONS.

CAUTION

- In some drawings in this manual, protective covers or shields are removed to show details. Make sure that all the covers or shields are installed in place before operating this product.
- YASKAWA is not responsible for incidents arising from unauthorized modification of its products. Unauthorized modification voids the product warranty.

NOTICE

- The drawings and photos in this manual are representative examples and differences may exist between them and the delivered product.
- YASKAWA may modify this model without notice when necessary due to product improvements, modifications, or changes in specifications. If such modification is made, the manual number will also be revised.
- If your copy of the manual is damaged or lost, contact a YASKAWA representative to order a new copy. The representatives are listed on the back cover. Be sure to tell the representative the manual number listed on the front cover.

Notes for Safe Operation

Read this manual carefully before installation, operation, maintenance, or inspection of the YRC1000micro.

In this manual, the Notes for Safe Operation are classified as “DANGER”, “WARNING”, “CAUTION”, or “NOTICE”.

DANGER

Indicates an imminently hazardous situation which, if not avoided, will result in death or serious injury. Safety Signs identified by the signal word DANGER should be used sparingly and only for those situations presenting the most serious hazards.

WARNING

Indicates a potentially hazardous situation which, if not avoided, will result in death or serious injury. Hazards identified by the signal word WARNING present a lesser degree of risk of injury or death than those identified by the signal word DANGER.

CAUTION

Indicates a hazardous situation, which if not avoided, could result in minor or moderate injury. It may also be used without the safety alert symbol as an alternative to “NOTICE”.

NOTICE

NOTICE is the preferred signal word to address practices not related to personal injury. The safety alert symbol should not be used with this signal word. As an alternative to “NOTICE”, the word “CAUTION” without the safety alert symbol may be used to indicate a message not related to personal injury.

Even items described as “CAUTION” may result in a serious accident in some situations.
At any rate, be sure to follow these important items.

NOTE

To ensure safe and efficient operation at all times, be sure to follow all instructions, even if not designated as “DANGER”, “WARNING” and “CAUTION".

DANGER

- Before operating the manipulator, make sure the servo power is turned OFF by performing the following operations. When the servo power is turned OFF, the SERVO ON LED on the programming pendant is turned OFF.
  - Press the emergency stop button on the programming pendant or on the external control device, etc.
  - Disconnect the safety plug of the safety fence. (when in the play mode or in the remote mode)

If operation of the manipulator cannot be stopped in an emergency, personal injury and/or equipment damage may result.

Fig. : Emergency Stop Button

- Before releasing the emergency stop, make sure to remove the obstacle or error caused the emergency stop, if any, and then turn the servo power ON.

Failure to observe this instruction may cause unintended movement of the manipulator, which may result in personal injury.

Fig. : Release of Emergency Stop

- Observe the following precautions when performing a teaching operation within the manipulator's operating range:
  - Be sure to perform lockout by putting a lockout device on the safety fence when going into the area enclosed by the safety fence. In addition, the operator of the teaching operation must display the sign that the operation is being performed so that no other person closes the safety fence.
  - View the manipulator from the front whenever possible.
  - Always follow the predetermined operating procedure.
  - Always keep in mind emergency response measures against the manipulator’s unexpected movement toward a person.
  - Ensure a safe place to retreat in case of emergency.

Failure to observe this instruction may cause improper or unintended movement of the manipulator, which may result in personal injury.

- Confirm that no person is present in the manipulator's operating range and that the operator is in a safe location before:
  - Turning ON the YRC1000micro power
  - Moving the manipulator by using the programming pendant
  - Running the system in the check mode
  - Performing automatic operations

Personal injury may result if a person enters the manipulator's operating range during operation. Immediately press an emergency stop button whenever there is a problem. The emergency stop button is located on the right of the programming pendant.

- Read and understand the Explanation of the Warning Labels before operating the manipulator.

DANGER

- In the case of not using the programming pendant, be sure to supply the emergency stop button on the equipment. Then before operating the manipulator, check to be sure that the servo power is turned OFF by pressing the emergency stop button.
  Connect the external emergency stop button to the 4-14 pin and 5-15 pin of the Safety connector (Safety).
- Upon shipment of the YRC1000micro, this signal is connected by a jumper cable in the dummy connector. To use the signal, make sure to supply a new connector, and then input it.

If the signal is input with the jumper cable connected, it does not function, which may result in personal injury or equipment damage.

WARNING

- Perform the following inspection procedures prior to conducting manipulator teaching. If there is any problem, immediately take necessary steps to solve it, such as maintenance and repair.
  - Check for a problem in manipulator movement.
  - Check for damage to insulation and sheathing of external wires.
- Return the programming pendant to a safe place after use.

If the programming pendant is left unattended on the manipulator, on a fixture, or on the floor, etc., the Enable Switch may be activated due to surface irregularities of where it is left, and the servo power may be turned ON. In addition, in case the operation of the manipulator starts, the manipulator or the tool may hit the programming pendant left unattended, which may result in personal injury and/or equipment damage.

Definition of Terms Used Often in This Manual

The MOTOMAN is the YASKAWA industrial robot product.

The MOTOMAN usually consists of the manipulator, the YRC1000micro controller, manipulator cables, the YRC1000micro programming pendant (optional), and the YRC1000micro programming pendant dummy connector (optional).

In this manual, the equipment is designated as follows:

Equipment	Manual Designation
YRC1000micro controller	YRC1000micro
YRC1000micro programming pendant	Programming pendant (optional)
Cable between the manipulator and the controller	Manipulator cable
YRC1000micro programming pendant dummy connector	Programming pendant dummy connector (optional)

Descriptions of the programming pendant keys, buttons, and displays are shown as follows:

Equipment		Manual Designation
Programming Pendant	Character Keys /Symbol Keys	The keys which have characters or symbols printed on them are denoted with [ ]. ex. [ENTER]
	Axis Keys /Number Keys	[Axis Key] and [Numeric Key] are generic names for the keys for axis operation and number input.
	Keys pressed simultaneously	When two keys are to be pressed simultaneously, the keys are shown with a “+” sign between them, ex. [SHIFT]+[COORD]
	Mode Key	Three kinds of modes that can be selected by the mode key are denoted as follows: REMOTE, PLAY, or TEACH
	Button	Three buttons on the upper side of the programming pendant are denoted as follows: HOLD button START button EMERGENCY STOP button
	Displays	The menu displayed in the programming pendant is denoted with { }. e.g. {JOB}
PC Keyboard		The name of the key is denoted. e.g. Ctrl key on the keyboard

Description of the Operation Procedure

In the explanation of the operation procedure, the expression "Select • • • " means that the cursor is moved to the object item and [SELECT] is pressed, or that the item is directly selected by touching the screen.

Registered Trademark

In this manual, names of companies, corporations, or products are trademarks, registered trademarks, or brand names for each company or corporation. The indications of (R) and TM are omitted.

Contents

1 Arm Interference with Specified Cubic Area Check Function 1-1
1.1 Outline of this Function 1-1
1.2 Setting of Arm Interference with Specified Cubic Area Check Function 1-2
1.2.1 Cubic Interference Area 1-2
1.2.2 Tool Interfere File 1-5
1.2.3 Example of Setting Tool Interfere File 1-6
1.3 Interference Position Resistor Output 1-7
1.3.1 Output Resistor 1-7
1.4 Recovery from Interference 1-9
1.4.1 Releasing Limit 1-9
1.4.2 Editing Interference Area Setting While Alarming 1-10
1.5 Notes 1-10

1 Arm Interference with Specified Cubic Area Check Function

1.1 Outline of this Function

The “check function of tool center point interferences with specified cubic areas”, which is a standard feature of the YRC1000micro, turns ON the corresponding its system output signals “#50080 to #50157:CUBE INTERFERENCE Signal” when the tool center point interfered with specified cubic areas.

Fig. 1-1: Tool Center Point Interference with Specified Cubic Area

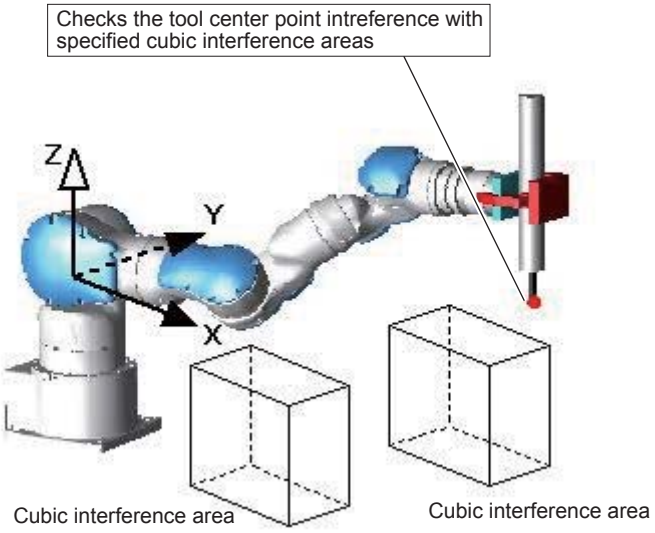

On the other hand, the “check function of arm interferences with specified cubic areas”, turns ON the corresponding its system output signals “#50080 to #50157:CUBE INTERFERENCE Signal” when the manipulator’s arm including its tool center point interfered with specified cubic areas.

Fig. 1-2: Arm Interference with Specified Cubic Area

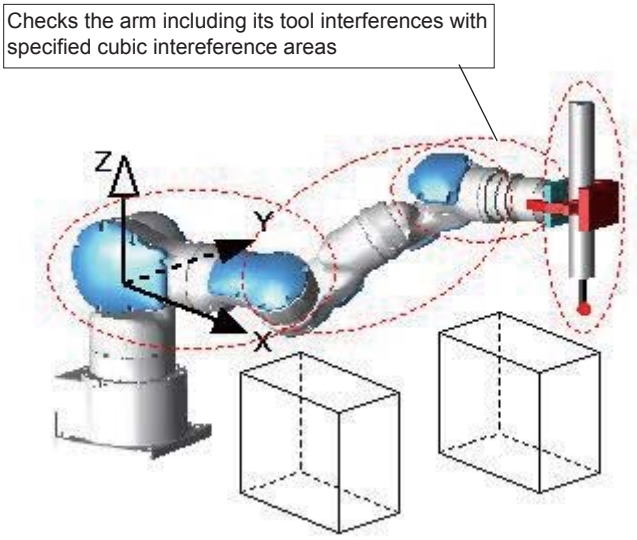

1.2 Setting of Arm Interference with Specified Cubic Area Check Function

1.2.1 Cubic Interference Area

Up to 64 cubic interference areas can be registered. Of these 64, up to 8 areas can be registered as interference areas to the arm.

Fig. 1-3: Numbers of Cubic Interference Area

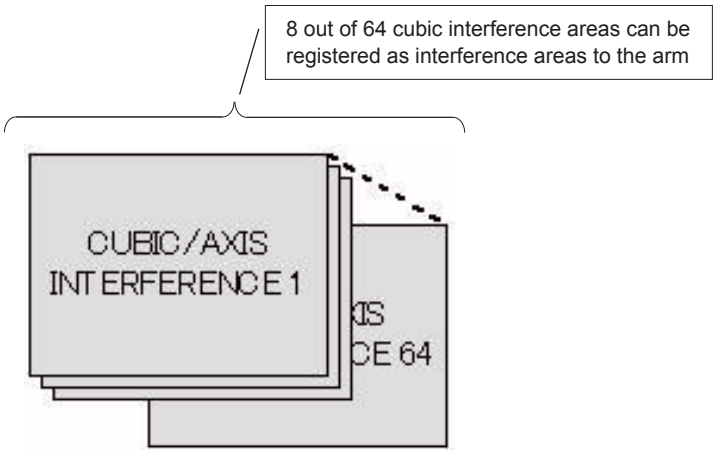

The cubic interference areas are displayed by pressing {Main Menu} → {ROBOT} → {INTEREFERENCE AREA}.
For the settings of the cubic interference area, refer to ”8.6.2 Cubic Interference Area" in "YRC1000micro INSTRUCTIONS (RE-CTO-A222).

On the cubic interference area setting window, display an INTERFERENCE SIGNAL window to be the subject of the arm interference with specified cubic areas check function.
Move the cursor key to the {MONITOR POSITION}.
Press [ENTER] to alternate “TOOL CENTER POINT” and “ENTIRE”.
Select “ENTIRE” and this interferences signal is set as one of the subject cubic areas of the arm interference.

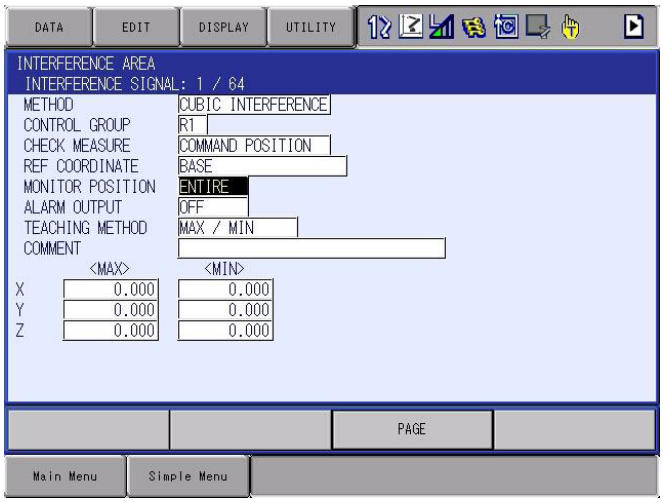

NOTE

Out of 64 possible interference areas, 8 cubic interference areas can be set to “ENTIRE” at “MONITOR POSITION” at maximum. If more than 8 areas are tried to be set, the following alarm occurs.

ERORR 1510: Cannot edit. The maximum number of cubic interference that is able to be set to “ENTIRE” is exceeded.

NOTE

Under the condition that “ENTIRE” is set to “MONITOR POSITION”, if 0.000[mm] is set as one of the cubic interference area side length, the YRC1000micro will automatically regards the length as 0.001[mm] to define the cubic interference area. Then, it starts checking the interferences with the arm.

For example, set an interference area with the length of X-axis direction as 0.000[mm] and other directions follows.

	<Max. value>	<Min. value>
X:	0.000[mm]	0.000[mm]
Y:	50.000[mm]	-50.000[mm]
Z:	50.000[mm]	-50.000[mm]

Taking the settings mentioned above, the YRC1000micro will automatically define the cubic interference area as follows.

	<Max. value>	<Min. value>
X:	0.005[mm]	-0.005[mm]
Y:	50.000[mm]	-50.000[mm]
Z:	50.000[mm]	-50.000[mm]

1 Arm Interference with Specified Cubic Area Check Function

1.2 Setting of Arm Interference with Specified Cubic Area Check Function

Set “ON” to {ALARM OUTPUT} after setting “ENTIRE” to {MONITOR POSITION}. The following alarm occurs and the manipulator stops immediately when the robot arm including the tool center point interferes with the already specified cubic interference areas.

AL 4903: CUBE INTEREFERENCE (ENTIRE)

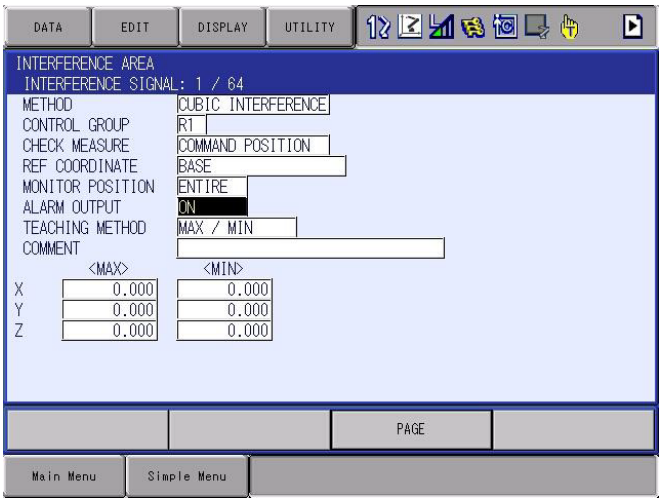

NOTE

The alarm occurs only under the following conditions after “ON” is set to {ALARM OUTPUT}.

When the robot is operated by JOG operation or move instruction.

However, the alarm would not occur when the manipulator is already inside of the interference cubic area before setting “ON” to {ALARM OUTPUT}.

1.2.2 Tool Interfere File

The manipulator's tool part shape must be registered by the customer because its tool shape varies depending on the work that the manipulator performs. The shape can be registered with TOOL INTERFERE file.

Press {Main Menu} → {ROBOT} → {TOOL INTERFERENCE} to display the TOOL INTERFERE file.

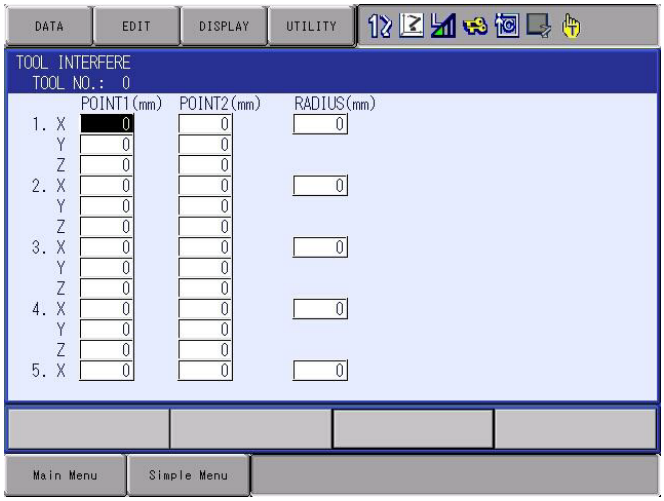

- A maximum of 64 tool interfere files, which is the same numbers as the tool files, can be set.
  The same numbered tool number and tool interference number are allocated one-on-one.
  In accordance with the tool number specified in the operation, a file is selected out of 64 files.
- A maximum of 5 cylinders and spheres can be specified for registering the shape of the tool.
- Values for cylinders and spheres can be input to No.1 to No.5 by moving the cursor key downward.
- Values input to Point 1 and 2 specify the either ends position of the cylinder.
  Like the setting of the tool dimensions, the setting values are set with the center of T-axis flange regarded as the starting point (X=0, Y=0, Z=0).
- The values input to "RADIUS" set the radius of the cylinders specified by Point 1 and 2. Also, the spheres with their center points at Point 1 and 2 are set with their radius specified by the values input to "RADIUS".

1.2.3 Example of Setting Tool Interfere File

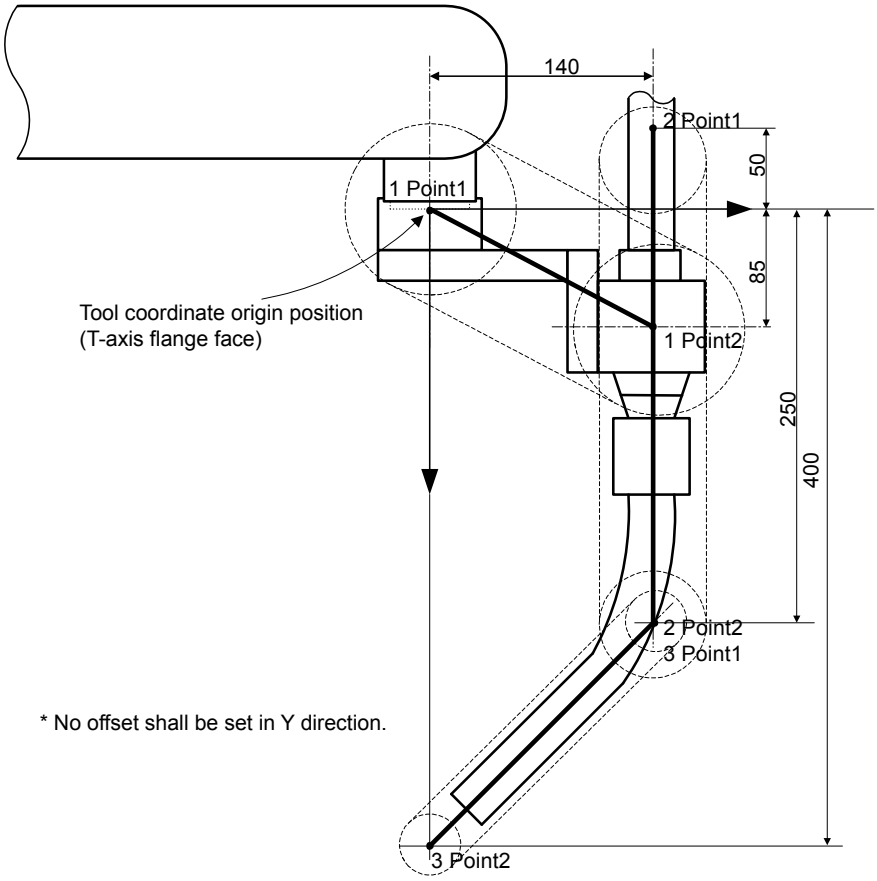

TOOL INTERFERE
TOOL NO. : 0 / 64

		POINT1(mm)	POINT2(mm)	RADIUS(mm)
1.	X	0	140	70
	Y	0	0	
	Z	0	85	
2.	X	140	140	30
	Y	0	0	
	Z	-50	250	
3.	X	140	0	20
	Y	0	0	
	Z	250	400	
4.	X	0	0	0
	Y	0	0	
	Z	0	0	
5.	X	0	0	0
	Y	0	0	
	Z	0	0	

1.3 Interference Position Resistor Output

When using the "Arm Interference with Specified Cubic Area Check Function", information about the interference position is output each register, which is allocated to every manipulator. The output items are two as follows;

- Which cubic interference area each manipulator is interfering with.
- Which axis of each manipulator is interfering with the cubic interference area.

1.3.1 Output Resistor

The interference position output resistors are allocated to each manipulator as follows.

Resistor number	M740	M741
Output contents	Cubic arm interference Check function Interference position Manipulator 1	Cubic arm interference Check function Interference position Manipulator 2

The output contents for each resistor (2 [bytes]) are as follows.

	Contents and output values
Upper 1 [byte]	Outputs which cubic interference area the manipulator arm is interfering with. 0: There is no cubic interference area interfering with. Non-zero: The interference signal number of the interfering cubic interference area < Example 1 > When the manipulator 2 is interfering with the cubic interference area of interference signal number 32; The upper 1[byte] of M741 = 0010_0000 (interference signal number: 32)
Lower 1 [byte]	Outputs which axis is interfering with the cubic interference area (bit output). 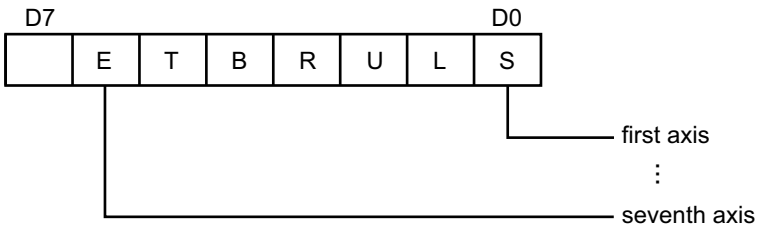 < Example 1 > When no axis of manipulator 2 is interfering with the cubic interference area; The lower 1[byte] of M741 = 0000_0000 < Example 2 > When the third axis (U-axis) of the manipulator 2 is interfering with the cubic interference area; The lower 1[byte] of M741 = 0000_0100

NOTE

If a manipulator interferes with multiple cubic interference areas simultaneously, the largest interference signal number of the interfering cubic interference area is output.

- Ex.: When manipulator 1 interferes with both interference signal number 1 and interference signal number 64 of the cubic interference area simultaneously;
  The upper 1[byte] of M740 = 0100_0000
  (interference signal number: 64)

If multiple axes of a manipulator interfere with the cubic interference area simultaneously, the lowest bit value of the interfering axis is output.

- Ex.: When the first axis (S-axis) and sixth axis (T-axis) of the manipulator 1 are both interfering.
  The lower 1[byte] of M740 = 0000_0001 (first axis)

1.4 Recovery from Interference

When {ALARM OUTPUT} is set to “ON” and {CHECK MEASURE} is set to “FEED BACK”, still the alarm occurs if the manipulator interferes with the interference area. Despite this alarm, the manipulator may not be put outside of the interference area. It is because that the manipulator is still inside of the area even after resetting the alarm and, furthermore, the alarm occurs again. Then, it becomes impossible to reset the alarm any more.
To put the manipulator outside of the interference area, refer to the following procedures.

1.4.1 Releasing Limit

The alarm status mentioned above can be released on LIMIT RELEASE window.

To display LIMIT RELEASE window, select {Main Menu} → {ROBOT} → {LIMIT RELEASE}.

Move the cursor key to {CUBIC/AXIS INTERFERENCE RELEASE} and press [SELECT] to alternate “VALID” and “INVALID”.

Monitoring of the interference can be released temporarily by setting “VALID” to {CUBIC/AXIS INTERFERENCE RELEASE} only when the mode is in teach mode.
However, {CUBIC/AXIS INTERFERENCE RELEASE} is set to “INVALID” again automatically when the mode is changed to play mode or to remote mode.

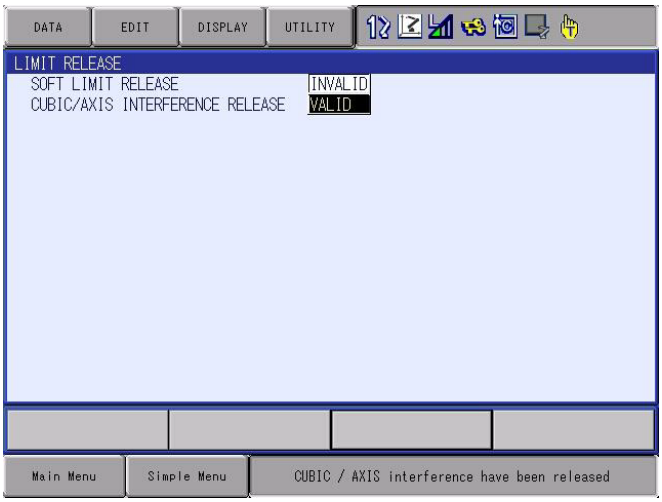

The user can release the alarm occurrence by following the procedures below.

1. Select {Main Menu} → {ROBOT} → {LIMIT RELEASE}.
2. Change the setting of {CUBIC/AXIS INTERFERENCE RELEASE} from “INVALID” to “VALID”.
3. Select {Main Menu} → {SYSTEM INFORMATION} → {ALARM}.
4. Press {ALARM RESET} button on the window.
5. Move the manipulator to outside of the interference area by JOG operation.
6. Select {Main Menu} → {ROBOT} → {LIMIT RELEASE}.

7. Change the setting of {CUBIC/AXIS INTERFERENCE RELEASE} from “VALID” to “INVALID”.

1.4.2 Editing Interference Area Setting While Alarming

On the CUBIC/AXIS INTERFERENCE setting window, the interference area can be edited even when the alarm is occurring.

The user can recover the manipulator from the alarm status by following the procedure below.

1. Select {Main Menu} → {ROBOT} → {INTERFERENCE AREA}.
2. Display the interference area specified by the alarm number.
3. Change the setting of {ALARM OUTPUT} from “ON” to “OFF”.
4. Select {Main Menu} → {SYSTEM INFORMATION} → {ALARM}.
5. Press down “ALARM RESET” button.
6. Move the manipulator to outside of the interference area by JOG operation.
7. Select {Main Menu} → {ROBOT} → {INTERFERENCE AREA}.
8. Change the setting of {ALARM OUTPUT} from “OFF” to “ON”.

1.5 Notes

①

When using the check function of arm interference with specified cubic areas, to avoid any interferences with the manipulator including its tool, set “COMMAND POSITION” to {CHECK MEASURE} on INTERFERENCE AREA window. Set the radius of the tool interfere file with allowances because there are position errors between the command position and the feed back position for the moving manipulator.

②

Determine the setting value of the TOOL INTERFERE file in accordance with the drawing.

YRC1000micro OPTIONS
INSTRUCTIONS

FOR ARM INTERFERENCE WITH SPECIFIED CUBIC AREA CHECK FUNCTION

HEAD OFFICE
2-1 Kurosakishiroishi, Yahatanishi-ku, Kitakyushu 806-0004, Japan
Phone +81-93-645-7703 Fax +81-93-645-7802

YASKAWA America Inc. (Motoman Robotics Division)
100 Automation Way, Miamisburg, OH 45342, U.S.A.
Phone +1-937-847-6200 Fax +1-937-847-6277

YASKAWA Europe GmbH（Robotics Divsion）
Yaskawastrasse 1, 85391 Allershausen, Germany
Phone +49-8166-90-100 Fax +49-8166-90-103

YASKAWA Nordic AB
Verkstadsgatan 2, Box 504 ,SE-385 25 Torsas, Sweden
Phone +46-480-417-800 Fax +46-486-414-10

YASKAWA Electric (China) Co., Ltd.
22F, One Corporate Avenue, No.222, Hubin Road, Huangpu District, Shanghai 200021, China
Phone +86-21-5385-2200 Fax ＋86-21-5385-3299

YASKAWA SHOUGANG ROBOT Co. Ltd.
No7 Yongchang North Road, Beijing E&T Development Area, China 100176
Phone +86-10-6788-2858 Fax +86-10-6788-2878

YASKAWA India Private Ltd. (Robotics Division)
#426, Udyog Vihar, Phase- IV, Gurgaon, Haryana, India
Phone +91-124-475-8500 Fax +91-124-475-8542

YASKAWA Electric Korea Corporation
35F, Three IFC, 10 Gukjegeumyung-ro, Yeongdeungpo-gu, Seoul, Korea 07326
Phone +82-2-784-7844 Fax +82-2-784-8495

YASKAWA Electric Taiwan Corporation
12F, No.207, Sec. 3, Beishin Rd., Shindian District, New Taipei City 23143, Taiwan
Phone +886-2-8913-1333 Fax +886-2-8913-1513

YASKAWA Electric (Singapore) PTE Ltd.
151 Lorong Chuan, #04-02A, New Tech Park, Singapore 556741
Phone +65-6282-3003 Fax +65-6289-3003

YASKAWA Electric (Thailand) Co., Ltd.
59,1st-5th Floor, Flourish Building, Soi Ratchadapisek 18,Ratchadapisek Road,
Huaykwang, Bangkok 10310, THAILAND
Phone +66-2-017-0099 Fax +66-2-017-0199

PT. YASKAWA Electric Indonesia
Secure Building-Gedung B Lantai Dasar & Lantai 1 Jl. Raya Protokol Halim Perdanakusuma,
Jakarta 13610, Indonesia
Phone +62-21-2982-6470 Fax +62-21-2982-6741

Specifications are subject to change without notice
for ongoing product modifications and improvements.

YASKAWA

YASKAWA ELECTRIC CORPORATION

© Printed in Japan July 2017 17-07

MANUAL NO.
HW1484510